MST-06XX00-B0900U

DLX® Mini-MST, Fiber Optic Multiport Service Terminal, 6-port, locat. flat loose tube cable, 900 ft

- Hardened connectors are factory-terminated and environmentally sealed for use in optical drop cable deployments
- Plug and play adapter ports ensure rapid cable installment in the outside plant access section of the network
- Multiport Service Terminals incorporate hardened connector technology that is designed to withstand the rugged outside plant environment

Product Classification

Regional Availability	Asia | Latin America | North America
Product Type	Access terminal, without splitter/tap
Product Brand	DLX®
Product Series	Mini-MST

General Specifications

Cable Type	Locatable - Flat - Loose Tube
Cable, quantity	1
Distribution Type	6 ports
Enclosure Color	Black
Mounting	Handhole | Pedestal | Pole | Strand
Port Type	Hardened mini-size DLX
Port, quantity	6
Splitter, quantity	0
Stub Type	Stub tail

Dimensions

Height	298 mm | 11.732 in
Width	130.3 mm | 5.13 in
Depth	89 mm | 3.504 in
Cable Length, stub	900 ft (274 m)
Cable Outer Diameter	5.0 mm (0.20 in)

©2024 CommScope, Inc. All rights reserved. CommScope and the CommScope logo are registered trademarks of CommScope and/or its affiliates in the U.S. and other countries. For additional trademark information see https://www.commscope.com/trademarks. All product names, trademarks and registered trademarks are property of their respective owners. Revised: May 18, 2024

MST-06XX00-B0900U

Dimension Drawing

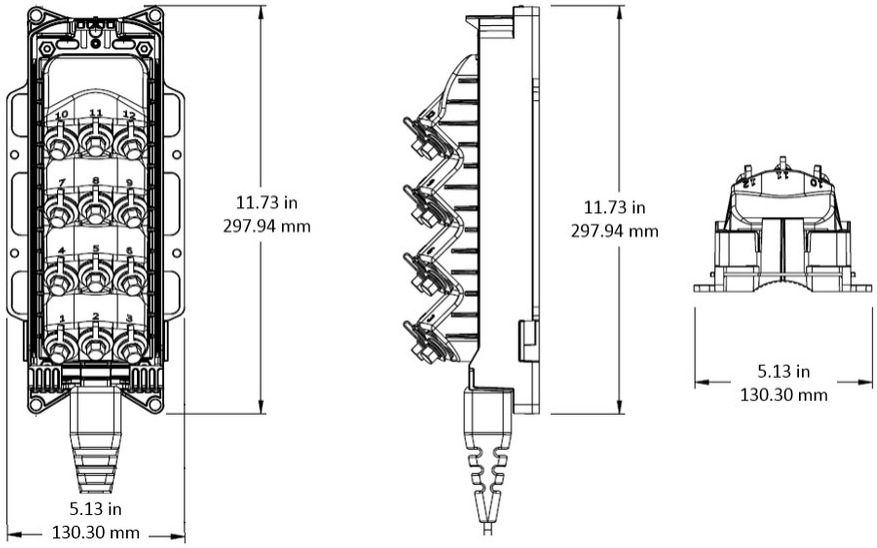

Ordering Tree

MST- □□ XX - □□ □ □□□□ □

Terminal Model

04	4-Port
06	6-Port
08	8-Port
12	12-port
0N	1x4 Splitter
0J	1x8 Splitter

Cable Termination

00	Pigtail (No connector)
X0	DLX connector (only available on splitter modules)

Cable Type

A	Dielectric – flat – loose tube
B	Locatable/tonable – flat – loose tube

Mounting Style*

U	Universal: Terminal is on top of the spool, stub deploys first
A	Reverse Spool: Terminal is on the bottom of the spool, terminal deploys first

*0 – 99' length of cable is automatically coiled (option U) and packaged two per box; multiple order quantity is two. Lengths greater than 99', choose U or A.

Cable Stub Length

0050	50 Feet
0100	100 Feet
0250	250 Feet
0500	500 Feet
0750	750 Feet
1000	1000 Feet
1500	1500 Feet
2000	2000 Feet

Cable lengths shown are for example; additional cable lengths are available in feet or meters upon request

Material Specifications

Enclosure Material Type	Gasketed hardened plastic

Optical Specifications

Fiber Type	G.657.A1/A2

©2024 CommScope, Inc. All rights reserved. CommScope and the CommScope logo are registered trademarks of CommScope and/or its affiliates in the U.S. and other countries. For additional trademark information see https://www.commscope.com/trademarks. All product names, trademarks and registered trademarks are property of their respective owners. Revised: May 18, 2024

Operating Wavelength Range	1260 – 1635 nm
Attenuation Cable Coefficient, maximum	0.30 dB/km @ 1550 nm | 0.40 dB/km @ 1310 nm
Attenuation Terminal Connectors, maximum	0.4 dB
Directivity, minimum	60 dB
Insertion Loss, Terminal Connector, typical	0.16 dB
Return Loss, Connector, minimum	65 dB

Environmental Specifications

Operating Temperature	-40 °C to +70 °C (-40 °F to +158 °F)
Relative Humidity	5%–100%, condensing
Environmental Space	Above ground | Below ground | Buried
Flammability Rating	UL 94 V-0
Qualification Standards	IEC 60529, IP68 + 2 m waterhead | Telcordia GR-3120-CORE | Telcordia GR-326-CORE | Telcordia GR-771-CORE
UV Resistance	UV stabilized

Packaging and Weights

Included	Enclosure (1) | Universal mounting bracket (1)
Packaging quantity	1
Packaging Type	Box | Carton
Weight, without cable	0.99 kg | 2.183 lb

Regulatory Compliance/Certifications

Agency	Classification
CHINA-ROHS	Below maximum concentration value
ISO 9001:2015	Designed, manufactured and/or distributed under this quality management system
REACH-SVHC	Compliant as per SVHC revision on www.commscope.com/ProductCompliance
ROHS	Compliant
UK-ROHS	Compliant

Included Products

MST-UMB-MINI – DLX® Mini-MST, Fiber Optic Universal Mounting

©2024 CommScope, Inc. All rights reserved. CommScope and the CommScope logo are registered trademarks of CommScope and/or its affiliates in the U.S. and other countries. For additional trademark information see https://www.commscope.com/trademarks. All product names, trademarks and registered trademarks are property of their respective owners. Revised: May 18, 2024

Bracket

©2024 CommScope, Inc. All rights reserved. CommScope and the CommScope logo are registered trademarks of CommScope and/or its affiliates in the U.S. and other countries. For additional trademark information see https://www.commscope.com/trademarks. All product names, trademarks and registered trademarks are property of their respective owners. Revised: May 18, 2024