884027314/10 | CS34R GRN C6 4/23 U/UTP CPK 1KFT

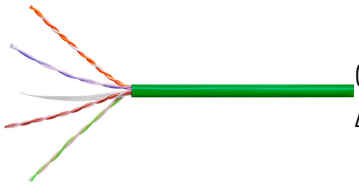

CS34R ETL Verified Category 6 U/UTP Cable, non-plenum, green jacket, 4 pair count, 1000 ft (305 m) length, CommPak

Product Classification

Regional Availability	Asia | Australia/New Zealand | EMEA | Latin America
Portfolio	NETCONNECT®
Product Type	Twisted pair cable

General Specifications

Product Number	CS34R
ANSI/TIA Category	6
Cable Component Type	Horizontal
Cable Type	U/UTP (unshielded)
Conductor Type, singles	Solid
Conductors, quantity	8
Jacket Color	Green
Note	All electrical transmission tests include swept frequency measurements
Pairs, quantity	4
Separator Type	Tape separator
Transmission Standards	ANSI/TIA-568.2-D | CENELEC EN 50288-6-1 | ISO/IEC 11801 Class E

Dimensions

Cable Length	304.8 m | 1000 ft
Diameter Over Insulated Conductor	1.054 mm | 0.041 in
Diameter Over Jacket, nominal	5.588 mm | 0.22 in
Jacket Thickness	0.508 mm | 0.02 in
Conductor Gauge, singles	23 AWG

Cross Section Drawing

©2024 CommScope, Inc. All rights reserved. CommScope and the CommScope logo are registered trademarks of CommScope and/or its affiliates in the U.S. and other countries. For additional trademark information see https://www.commscope.com/trademarks. All product names, trademarks and registered trademarks are property of their respective owners. Revised: August 1, 2024

884027314/10 | CS34R GRN C6 4/23 U/UTP CPK 1KFT

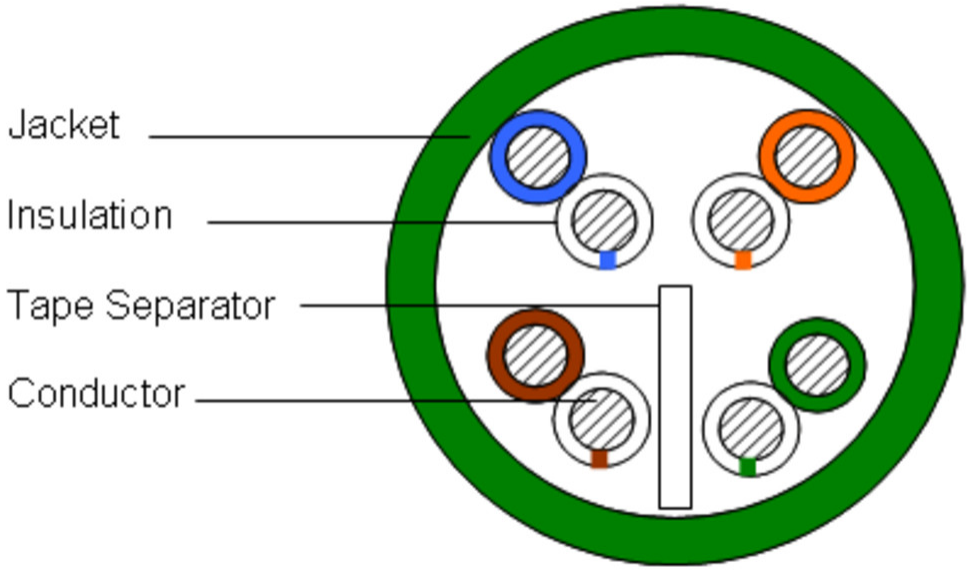

Electrical Specifications

Characteristic Impedance	100 ohm
dc Resistance Unbalance, maximum	5 %
dc Resistance, maximum	8 ohms/100 m | 2.438 ohms/100 ft
Delay Skew, maximum	30 ns
Dielectric Strength, minimum	1500 Vac | 2500 Vdc
Mutual Capacitance at Frequency	5.6 nF/100 m @ 1 kHz
Nominal Velocity of Propagation (NVP)	69 %
Operating Frequency, maximum	250 MHz
Operating Voltage, maximum	80 V
Remote Powering	Fully complies with the recommendations set forth by IEEE 802.3bt (Type 4) for the safe delivery of power over LAN cable when installed according to ISO/IEC 14763-2, CENELEC EN 50174-1, CENELEC EN 50174-2 or TIA TSB-184-A
Safety Voltage Rating	300 V

©2024 CommScope, Inc. All rights reserved. CommScope and the CommScope logo are registered trademarks of CommScope and/or its affiliates in the U.S. and other countries. For additional trademark information see https://www.commscope.com/trademarks. All product names, trademarks and registered trademarks are property of their respective owners. Revised: August 1, 2024

884027314/10 | CS34R GRN C6 4/23 U/UTP CPK 1KFT

Electrical Cable Performance

CS	CommScope
STD	Refers to the standard value listed under Transmission Standards in the Electrical Specifications above
TYP	Typical Electrical Performance
IL	Insertion Loss (dB/100m)
ACR	Attenuation to Crosstalk Ratio (dB/100m)
PSACR	Power Sum Attenuation to Crosstalk Ratio (dB/100m)
PSACRF	Power Sum Attenuation to Crosstalk Ratio - Far End (dB/100m)
TCL	Transverse Conversion Loss (dB/100m)
NEXT	Near End Crosstalk (dB/100m)
PSNEXT	Power Sum Near End Crosstalk (db/100m)
ACRF	Attenuation to Crosstalk Ratio - Far End (dB/100m)
RL	Return Loss (dB)
ELTCTL	Equal Level Transverse Conversion Transfer Loss (dB/100m)

Freq. MHz	IL			NEXT			ACR			PSNEXT			PSACR			ACRF			PSACRF			RL		
	CS	STD	TYP	CS	STD	TYP	CS	STD	TYP	CS	STD	TYP	CS	STD	TYP	CS	STD	TYP	CS	STD	TYP	CS	STD	TYP
1	2	2	1.8	75.3	74.3	89.3	73.3	72.3	87.6	72.3	72.3	87	70.3	70.3	85.3	68	67.8	84.3	65	64.8	82.4	20	20	34
4	3.8	3.8	3.5	66.3	65.3	80	62.5	61.5	76.5	63.3	63.3	77.7	59.5	59.5	74.1	56	55.8	72.6	53	52.8	70.8	23	23	33.9
8	5.3	5.3	5	61.8	60.8	75.5	56.4	55.4	70.5	58.8	58.8	73.2	53.4	53.4	68.2	49.8	49.7	66.8	46.9	46.7	64.9	24.5	24.5	35.5
10	6	6	5.6	60.3	59.3	73.9	54.3	53.3	68.3	57.3	57.3	71.5	51.3	51.3	65.9	48	47.8	64.9	45	44.8	63	25	25	36.5
16	7.6	7.6	7.2	57.2	56.2	70.6	49.7	48.7	63.4	54.2	54.2	68.3	46.7	46.7	61.1	43.9	43.7	60.8	40.9	40.7	58.9	25	25	37.6
20	8.5	8.5	8.1	55.8	54.8	69.2	47.3	46.3	61.2	52.8	52.8	66.9	44.3	44.3	58.8	42	41.8	58.9	39	38.8	56.9	25	25	38.2
25	9.5	9.5	9	54.3	53.3	67.6	44.8	43.8	58.6	51.3	51.3	65.3	41.8	41.8	56.2	40	39.8	57	37	36.8	55	24.3	24.3	38.2
31.25	10.7	10.7	10.1	52.9	51.9	66.3	42.2	41.2	56.1	49.9	49.9	63.9	39.2	39.2	53.8	38.1	37.9	55	35.1	34.9	53	23.6	23.6	38.3
62.5	15.4	15.4	14.5	48.4	47.4	61.4	33	32	46.9	45.4	45.4	59	30	30	44.5	32.1	31.9	48.9	29.1	28.9	46.9	21.5	21.5	34.7
100	19.8	19.8	18.6	45.3	44.3	58.1	25.5	24.5	39.5	42.3	42.3	55.7	22.5	22.5	37.1	28	27.8	44.7	25	24.8	42.8	20.1	20.1	31.6
155	25.2	25.2	23.5	42.4	41.4	55.7	17.3	16.3	32.2	39.4	39.4	53	14.3	14.3	29.5	24.2	24	41	21.2	21	39	18.8	18.8	29.6
200	29	29	26.9	40.8	39.8	52.6	11.8	10.8	25.7	37.8	37.8	50.4	8.8	8.8	23.4	22	21.8	38.6	19	18.8	36.7	18	18	29.3
250	32.8	32.8	30.3	39.3	38.3	50.8	6.5	5.5	20.5	36.3	36.3	48.6	3.5	3.5	18.3	20	19.8	36.5	17	16.8	34.7	17.3	17.3	28.8
300			33.5			49			15.6			46.8			13.4			34.5			32.6			28.9
350			36.4			47.6			11.2			45.4			9			33			31			29
400			39			46.3			7.3			44.1			5.1			31.3			29.3			30.3
500			44.3			43.2			-1.1			41.2			-3.1			27.3			25.5			31
550			44.6			43.1			-0.5			41.2			-2.5			27.4			25.5			31
650			51.3			40.2			-11.1			38.4			-12.9			22.3			20.4			25

Material Specifications

Conductor Material	Bare copper
Insulation Material	Polyolefin
Jacket Material	PVC
Separator Material	Polyolefin

Mechanical Specifications

Pulling Tension, maximum	11.34 kg | 25 lb

Environmental Specifications

©2024 CommScope, Inc. All rights reserved. CommScope and the CommScope logo are registered trademarks of CommScope and/or its affiliates in the U.S. and other countries. For additional trademark information see https://www.commscope.com/trademarks. All product names, trademarks and registered trademarks are property of their respective owners. Revised: August 1, 2024

Installation temperature	0 °C to +60 °C (+32 °F to +140 °F)
Operating Temperature	-20 °C to +60 °C (-4 °F to +140 °F)
Environmental Space	Non-plenum
Flame Test Method	CMR | NEC Article 800 | UL 1666 | UL 444

Packaging and Weights

Cable weight	35.091 kg/km | 23.58 lb/kft
Packaging Type	CommPak® box

Regulatory Compliance/Certifications

Agency	Classification
ISO 9001:2015	Designed, manufactured and/or distributed under this quality management system

©2024 CommScope, Inc. All rights reserved. CommScope and the CommScope logo are registered trademarks of CommScope and/or its affiliates in the U.S. and other countries. For additional trademark information see https://www.commscope.com/trademarks. All product names, trademarks and registered trademarks are property of their respective owners. Revised: August 1, 2024