MATERIAL ID	DESCRIPTION
760174136	DUCT, MOUNTING SOLUTIONS, MOUNTING HARDWARE, DUCT MOUNTING BRACKET, 100MM

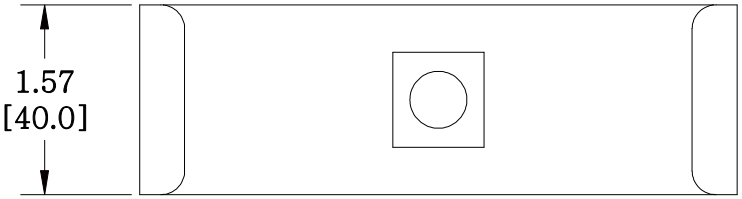

NOTES:

1. SEE COMMSCOPE CATALOG FOR PART NUMBER SUFFIXES TO INDICATE COLOR/PKG.

2. SEE COMMSCOPE CATALOG FOR COMPLETE LIST OF PARTS RELATED TO THE USE OF THIS PRODUCT.

3. DIMENSIONS IN PARENTHESES ARE IN METRIC.

4. PART INCLUDES:
(1) DUCT

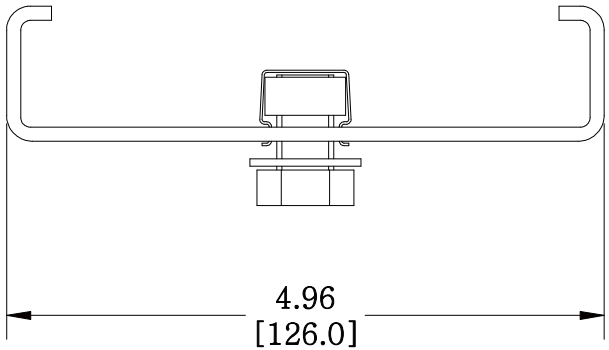

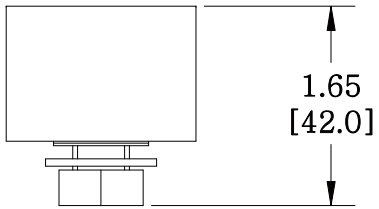

DUCT, MOUNTING SOLUTIONS, MOUNTING HARDWARE, DUCT MOUNTING BRACKET, 100MM

COMMSCOPE, INC OF NORTH CAROLINA

REV	DATE	ECR	DESCRIPTION	APPROVED BY	DRAWN BY		DWG NO
1	10/29/12		INITIAL ISSUE		TZ		
					DATE 10/29/2012		760174136

© 2010CommScope, Inc. All Rights Reserved