NOTES:

REVISIONS			
REV.	DESCRIPTION	DATE	APPROVED
A	ECR 8000007305: REL TO PRODUCTION PER EAO 602561.	26MAY15 DYT	DM.WANG/L.SHAN

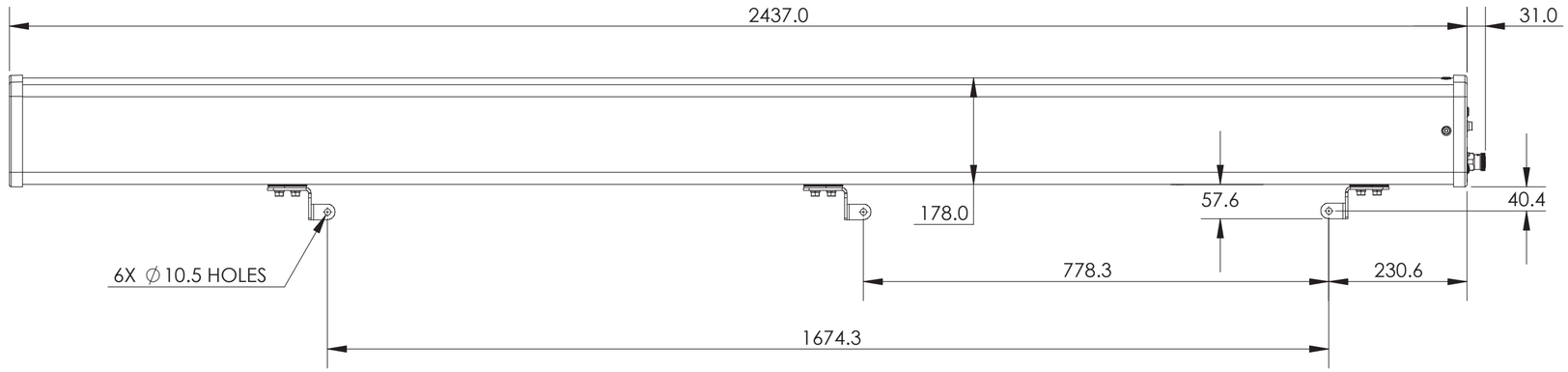

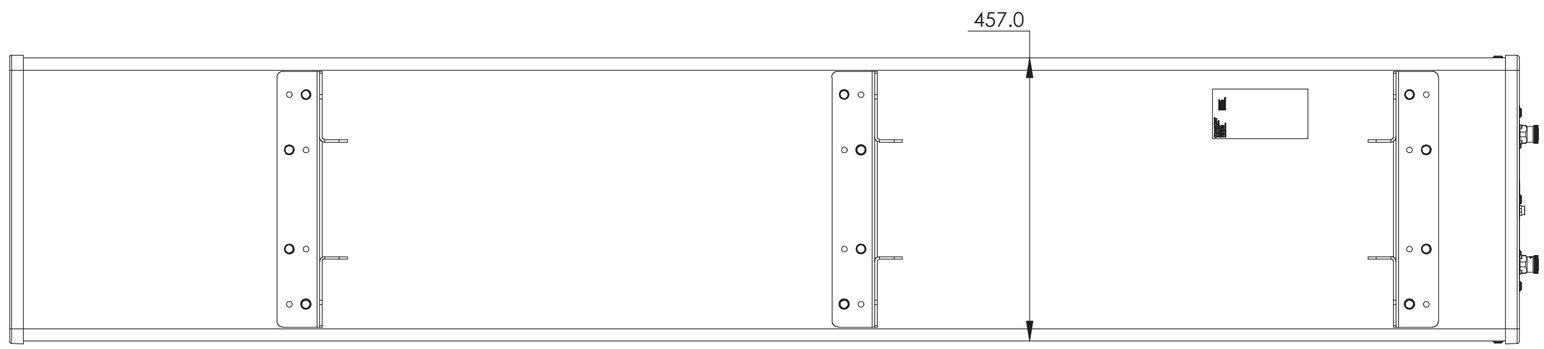

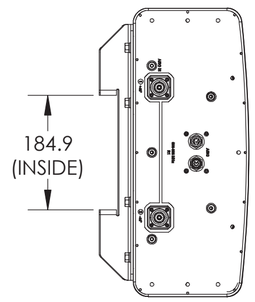

N45C-1XB1

COMMSCOPE, INC. OF NORTH CAROLINA

TOLERANCES			
0 PLACE	X ±	2 PLACE	.XX ±
1 PLACE	.X ±	ANGLES	±

SAP MATERIAL MASTER

FINISH: N/A

MATERIAL: N/A

UNLESS OTHERWISE SPECIFIED DIMENSIONS ARE IN MILLIMETERS INTERPRETED TO STANDARDS HANDBOOK TECHNICAL DRAWINGS, VOLUMES 1 & 2, THIRD EDITION (2002)

	NAME	DATE
CE	YD1002	05/26/2015
RW	YD1002	06/05/2015
RV	DW1030	06/05/2015
AD	LS1037	06/05/2015
RE	BYUAN	06/07/2015

ECN 8000007305-O

TITLE: **PRODUCT DRAWING**

SCALE: **1:5**

DOCUMENT NO. **N45C-1XB1-L**

DENSITY	g/mm³
MASS	grams
VOLUME	mm³
SURFACE AREA	mm²
HEIGHT	
LENGTH	
WIDTH	

SIZE: **A2**

WORK AREA 23

MODEL			DRAWING			SHEET
VERSION	STATUS	REVISION	VERSION	STATUS	REVISION	
00	RE	A	00	RE	A	1 OF 1

© 2015 CommScope, Inc.