Specification Control Drawing for the Generic Closure Organizer (FIST-GCO2)

Closure assembly	2
Short dome	3
Medium dome	4
Large dome	5
Base – cable ports	6
Base assembly	7
Dome/base clamp	8
Sealing ring	9
Oval outlet seal	10
Branch-off clip for oval outlet cable seal	11
Drop cable seal	12

Closure assembly

Part description FIST-GCO2 closures
Part number See table underneath

Dimensions (in mm)

Product size	Assembly length (nom.)
FIST-GCO2-BC	488
FIST-GCO2-BD	566
FIST-GCO2-BE	680

Notes Nominal values are given for information only

Drawing key
[792]
1. Dome
2. Base
3. Dome to base sealing ring
4. Optional valve

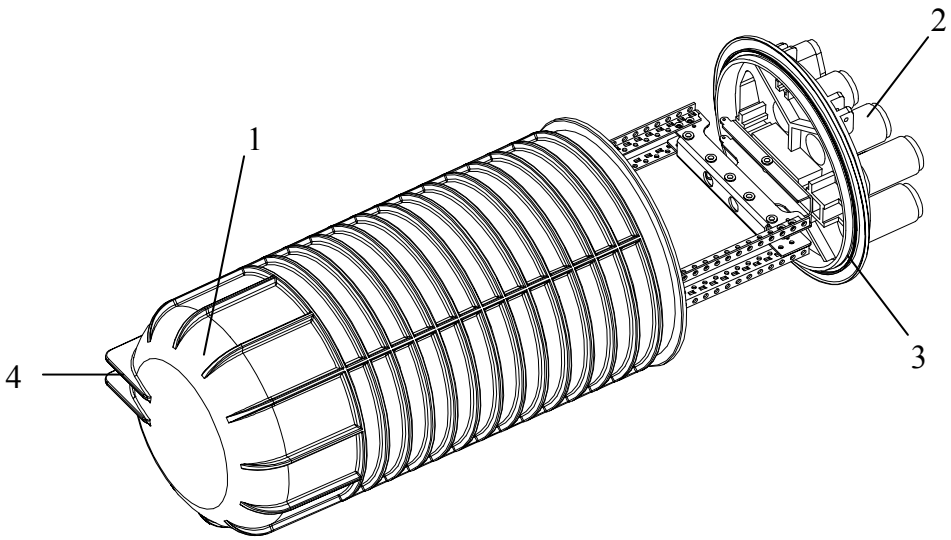

Short dome

Part description	Short dome for size BC
Part number	K341-2177-01
Material	PP

Dimensions (in mm)

Product size	Diameter D (± 1)	Length L (nom.)
FIST-GCO2-BC	247	410

Notes Nominal values are given for information only.

Drawing key
[728]

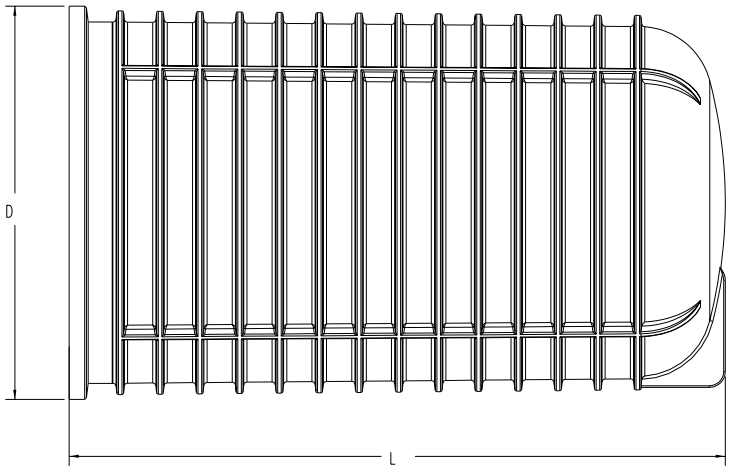

Medium dome

Part description	Medium dome for size BD
Part number	K341-4867-AC
Material	PP

Dimensions (in mm)

Product size	Diameter D (± 1)	Length L (nom.)
FIST-GCO2-BD	247	490

Notes Nominal values are given for information only.

Drawing key
[759b]

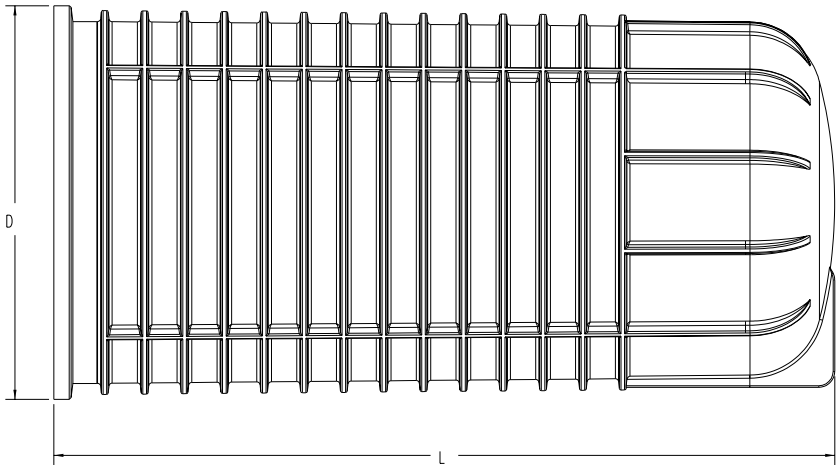

Large dome

Part description	Large dome for size BE
Part number	K348-2297-01
Material	PP

Dimensions (in mm)

Product size	Diameter D (± 1)	Length L (nom.)
FIST-GCO2-BE	247	600

Notes Nominal values are given for information only.

Drawing key
[530b]

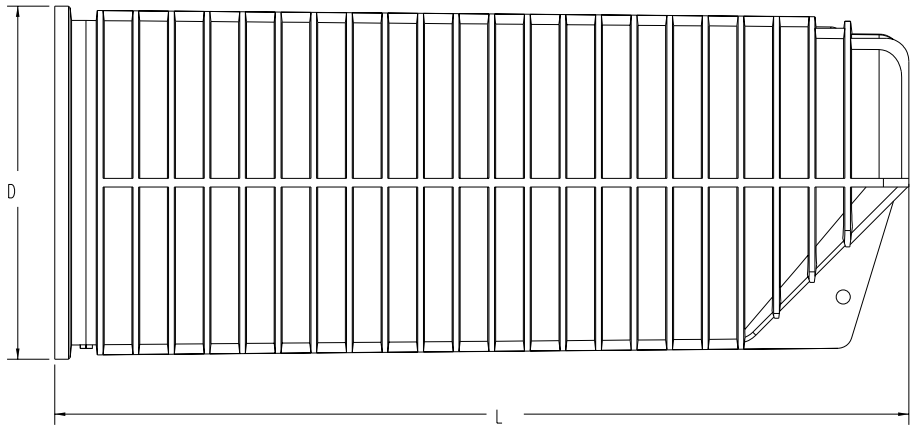

Base – cable ports

Part description	Base – cable ports
Part number	NA
Material	PP

Dimensions (in mm)

Product size	A (nom.)	B (nom.)	B* (nom.)	B** (nom.)	C (nom.)	D (± 1)
6-port-base	30	30	-	-	82	247
16-port base	30	-	20	13.5	82	247

Notes Nominal values are given for information only.

Drawing key
[483]

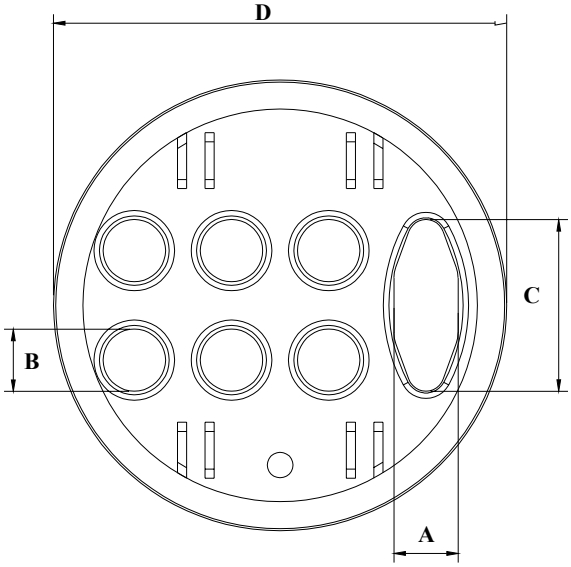

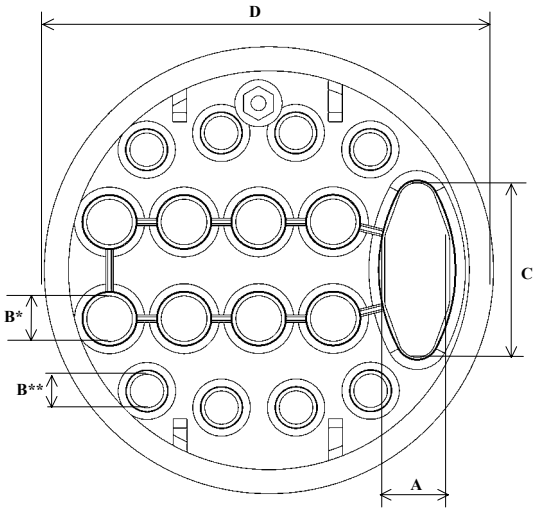

Base assembly

Part description	Base assembly
Part number	NA

Drawing key
[793]

1. Base
2. Stainless steel ring
3. Strength member bracket
4. Universal organizer frame

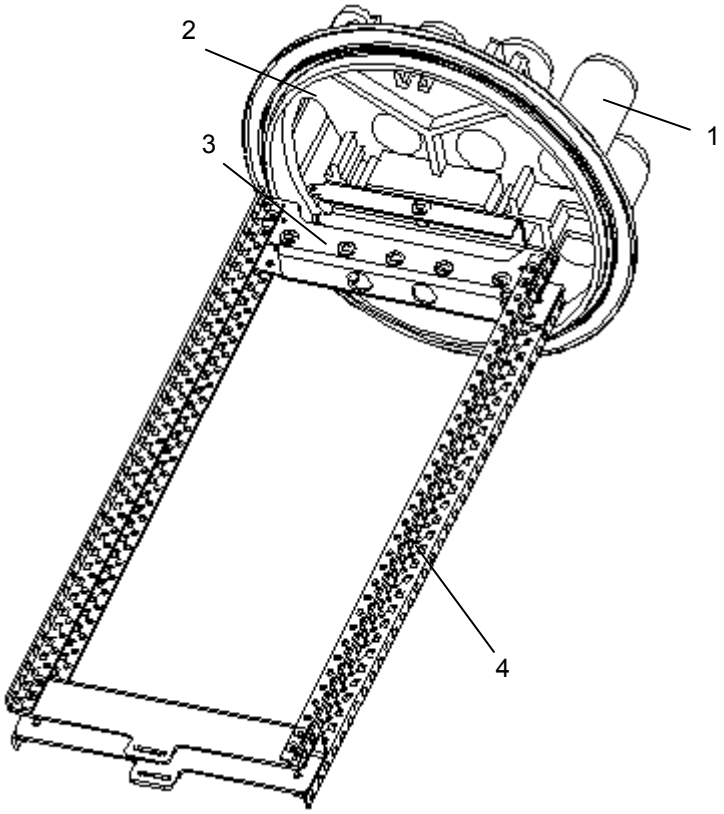

Dome/base clamp

Part description	Dome/base clamp
Part number	CLAM-ASSY-247-DEV
Material	Glass filled PA

Dimensions (in mm)

	D1 (nom.)	D2 (nom.)
Dome/base clamp	291	263

Notes Nominal values are given for information only.

Drawing key
[520]

1. Hinge
2. Securing points
3. Clamp lever
4. Clamp halves

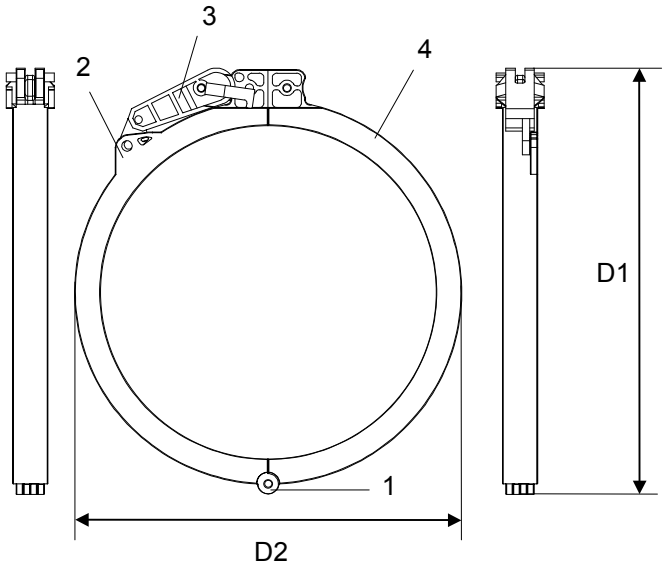

Sealing ring

Part description Dome/base sealing ring
Part number E7000-1031
Material Buna 50 shore A

Dimensions (in mm)

	C (nom.)	E (nom.)
Sealing ring	222	5.3

Notes Nominal values are given for information only.
Dimensions before assembly.

Drawing key
[388]

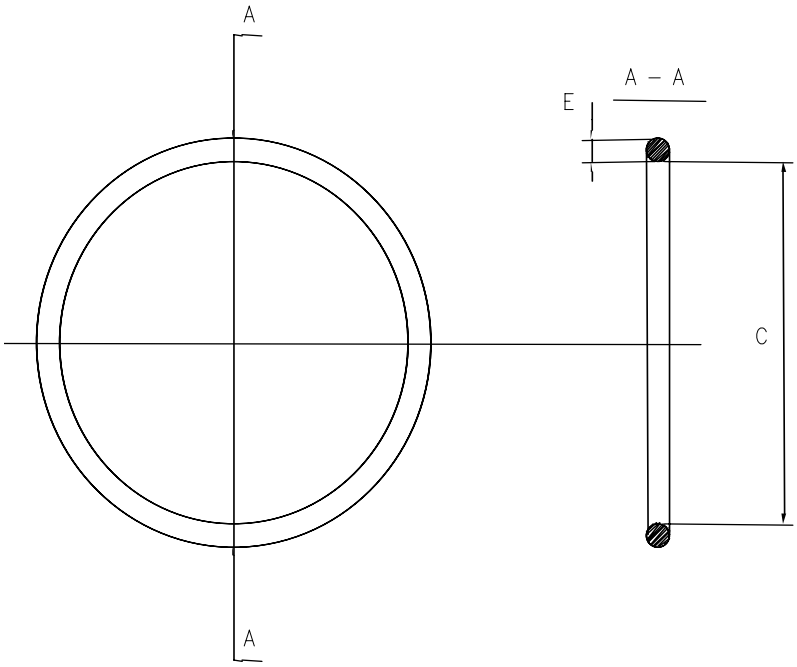

Oval outlet seal

Part description	Oval outlet seal
Part number	XCST-80/22-150
Material	1. Modified polyolefin
	2. Holt-melt adhesive
	3. Temperature indicating paint
	4. Uncoated zones

Dimensions (in mm)

	H* (min.)	L (± 5)
XCST-80/22-150	76	150

Notes * In adhesive coated areas (not overlapping).

Drawing key
[525b]

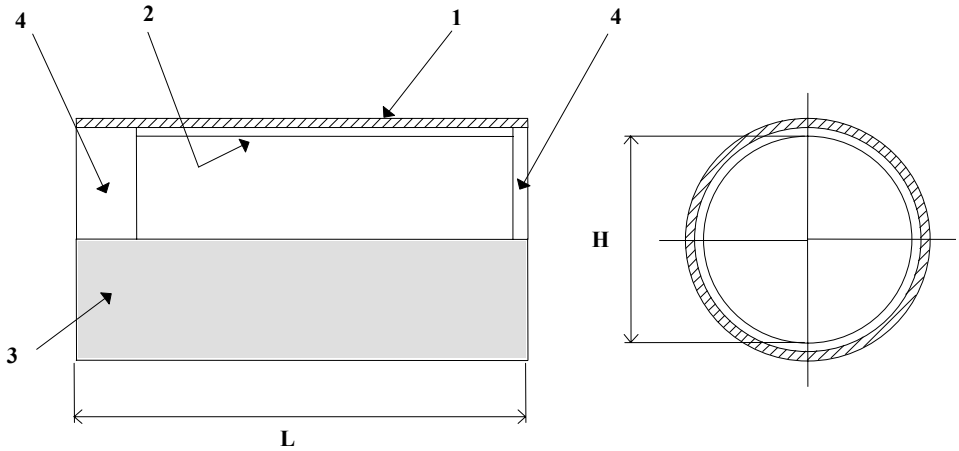

Branch-off clip for oval outlet cable seal

Part description	Branch-off clip for oval outlet cable seal
Part number	BOCL-20-1641
Material	1. Corrosion protected aluminum alloy 2. Holt-melt adhesive

Dimensions (in mm)

	H (± 0.35)	J (nom.)	M (min.)	P (± 0.7)	R (± 0.5)	S (min.)
BOCL-20-1641	4.25	5	10	64	28.2	53

Notes Nominal values are given for information only.

Drawing key
[220new2]

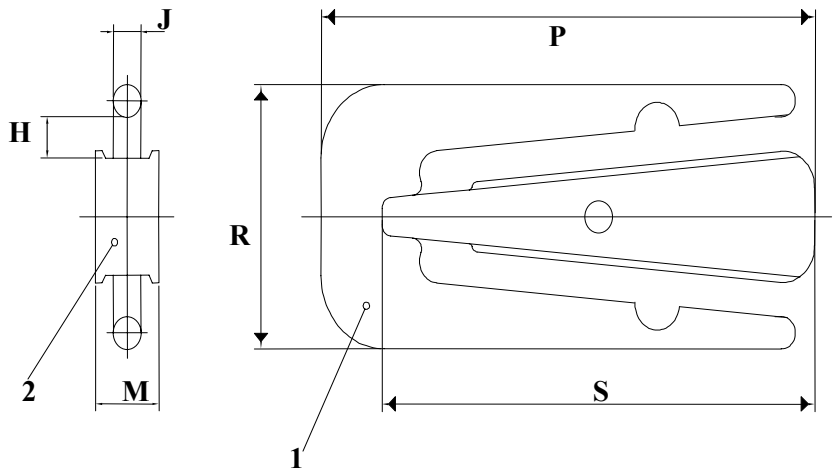

Drop cable seal

Part description	Drop cable seal
Part number	XCST-44/12-150
Material	1. Modified polyolefin
	2. Holt-melt adhesive
	3. Temperature indicating paint
	4. Uncoated zones

Dimensions (in mm)

	H* (min.)	L (± 5)
XCST-44/12-150	44	150

Notes * In adhesive coated areas (not overlapping).

Drawing key

[525]

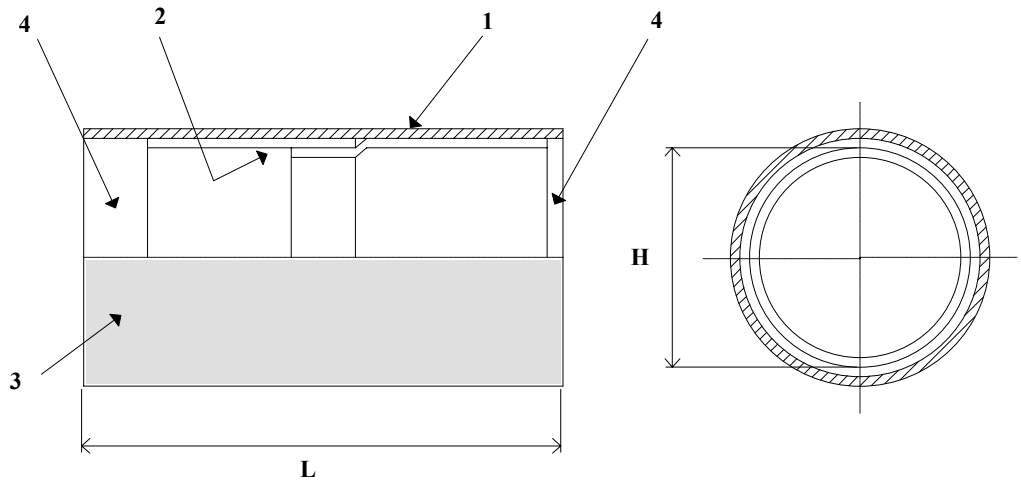

CommScope Connectivity Belgium bvba
Diestsesteenweg 692
B-3010 Kessel-Lo, Belgium
Tel.: 32-16-351 011
Fax: 32-16-351 697
www.commscope.com

Visit our website or contact your local CommScope representative for more information.
© 2016 CommScope, Inc. All rights reserved.
FIST, SMOUV and all trademarks identified by ® or ™ are registered trademarks or trademarks, respectively, of CommScope, Inc. This document is for planning purposes only and is not intended to modify or supplement any specifications or warranties relating to CommScope products or services.