L4HMP-D

4.3-10 Male Push Pull for 1/2 in LDF4-50A cable.

Product Classification

Product Type	Wireless and radiating connector
Product Brand	HELIAX®
Product Series	LDF4-50A
Ordering Note	CommScope® standard product (Global)

General Specifications

Body Style	Straight
Cable Family	LDF4-50A
Inner Contact Attachment Method	Captivated
Inner Contact Plating	Silver
Interface	4.3-10 Male
Mounting Angle	Straight
Outer Contact Attachment Method	Clamp
Outer Contact Plating	Trimetal

Dimensions

Length	73.15 mm | 2.88 in
Diameter	24.89 mm | 0.98 in
Nominal Size	1/2 in

©2024 CommScope, Inc. All rights reserved. CommScope and the CommScope logo are registered trademarks of CommScope and/or its affiliates in the U.S. and other countries. For additional trademark information see https://www.commscope.com/trademarks. All product names, trademarks and registered trademarks are property of their respective owners. Revised: May 6, 2024

L4HMP-D

Outline Drawing

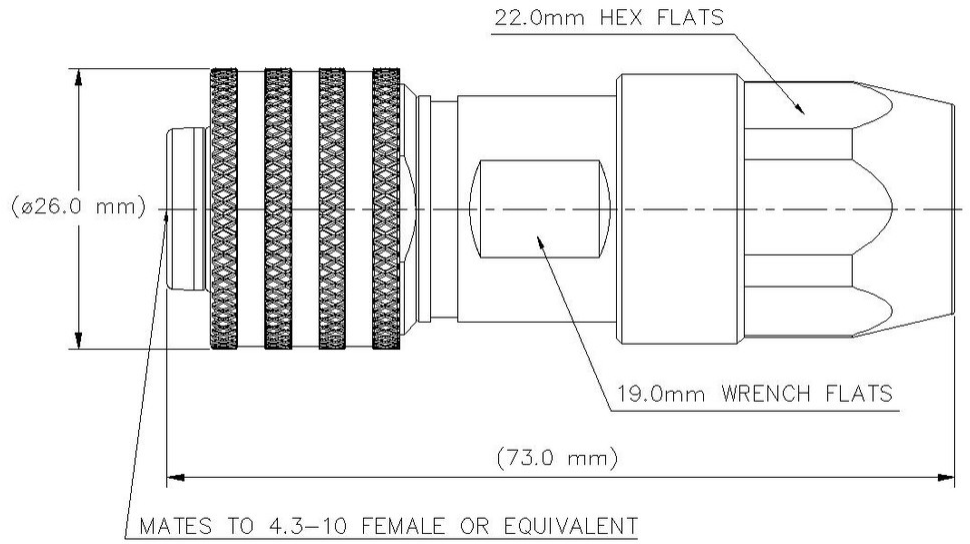

Electrical Specifications

3rd Order IMD at Frequency	-116 dBm @ 910 MHz
3rd Order IMD Dynamic Test Method	Two +43 dBm carriers
Insertion Loss Coefficient, typical	0.05
Average Power at Frequency	600.0 W @ 900 MHz
Cable Impedance	50 ohm
Connector Impedance	50 ohm
dc Test Voltage	2500 V
Inner Contact Resistance, maximum	1 mOhm
Insulation Resistance, minimum	5000 MOhm
Operating Frequency Band	0 – 8800 MHz
Outer Contact Resistance, maximum	1 mOhm
Peak Power, maximum	22.5 kW
RF Operating Voltage, maximum (vrms)	884 V
Shielding Effectiveness	-110 dB

VSWR/Return Loss

©2024 CommScope, Inc. All rights reserved. CommScope and the CommScope logo are registered trademarks of CommScope and/or its affiliates in the U.S. and other countries. For additional trademark information see https://www.commscope.com/trademarks. All product names, trademarks and registered trademarks are property of their respective owners. Revised: May 6, 2024

L4HMP-D

Frequency Band	VSWR	Return Loss (dB)
45–1000 MHz	1.02	40.09
1000–2700 MHz	1.025	38.17
2700–3800 MHz	1.065	30.04
3800–6000 MHz	1.106	25.96

Mechanical Specifications

Attachment Durability	5 cycles
Connector Retention Tensile Force	889.64 N | 200 lbf
Connector Retention Torque	5.42 N-m | 47.998 in lb
Interface Durability	25 cycles
Mechanical Shock Test Method	IEC 60068-2-27

Environmental Specifications

Operating Temperature	-55 °C to +85 °C (-67 °F to +185 °F)
Storage Temperature	-55 °C to +85 °C (-67 °F to +185 °F)
Corrosion Test Method	IEC 60068-2-11
Immersion Depth	1 m
Immersion Test Mating	Mated
Immersion Test Method	IEC 60529:2001, IP68
Moisture Resistance Test Method	IEC 60068-2-3
Thermal Shock Test Method	IEC 60068-2-14
Vibration Test Method	IEC 60068-2-6
Water Jetting Test Mating	Mated
Water Jetting Test Method	IEC 60529:2001, IP66

Packaging and Weights

Weight, net	122.9 g | 0.271 lb

Regulatory Compliance/Certifications

Agency	Classification
CHINA-ROHS	Below maximum concentration value
ISO 9001:2015	Designed, manufactured and/or distributed under this quality management system
REACH-SVHC	Compliant as per SVHC revision on www.commscope.com/ProductCompliance

©2024 CommScope, Inc. All rights reserved. CommScope and the CommScope logo are registered trademarks of CommScope and/or its affiliates in the U.S. and other countries. For additional trademark information see https://www.commscope.com/trademarks. All product names, trademarks and registered trademarks are property of their respective owners. Revised: May 6, 2024

L4HMP-D

ROHS	Compliant
UK-ROHS	Compliant

* Footnotes

Insertion Loss Coefficient, typical	0.05√¯freq (GHz) (not applicable for elliptical waveguide)
Immersion Depth	Immersion at specified depth for 24 hours

©2024 CommScope, Inc. All rights reserved. CommScope and the CommScope logo are registered trademarks of CommScope and/or its affiliates in the U.S. and other countries. For additional trademark information see https://www.commscope.com/trademarks. All product names, trademarks and registered trademarks are property of their respective owners. Revised: May 6, 2024