TL-SO6

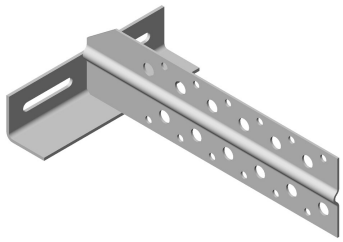

Waveguide Stand-Off Bracket for 6 coaxial cable runs

Product Classification

Product Type	Waveguide stand-off bracket

General Specifications

Cable Runs, quantity	6
Mounting	Leg gussets | Tower legs up to 114.3 mm (4-1/2 in) OD | Wall applications

Dimensions

Height	101.6 mm | 4 in
Width	330.2 mm | 13 in
Length	279.4 mm | 11 in

©2024 CommScope, Inc. All rights reserved. CommScope and the CommScope logo are registered trademarks of CommScope and/or its affiliates in the U.S. and other countries. For additional trademark information see https://www.commscope.com/trademarks. All product names, trademarks and registered trademarks are property of their respective owners. Revised: September 1, 2023

TL-SO6

Outline Drawing

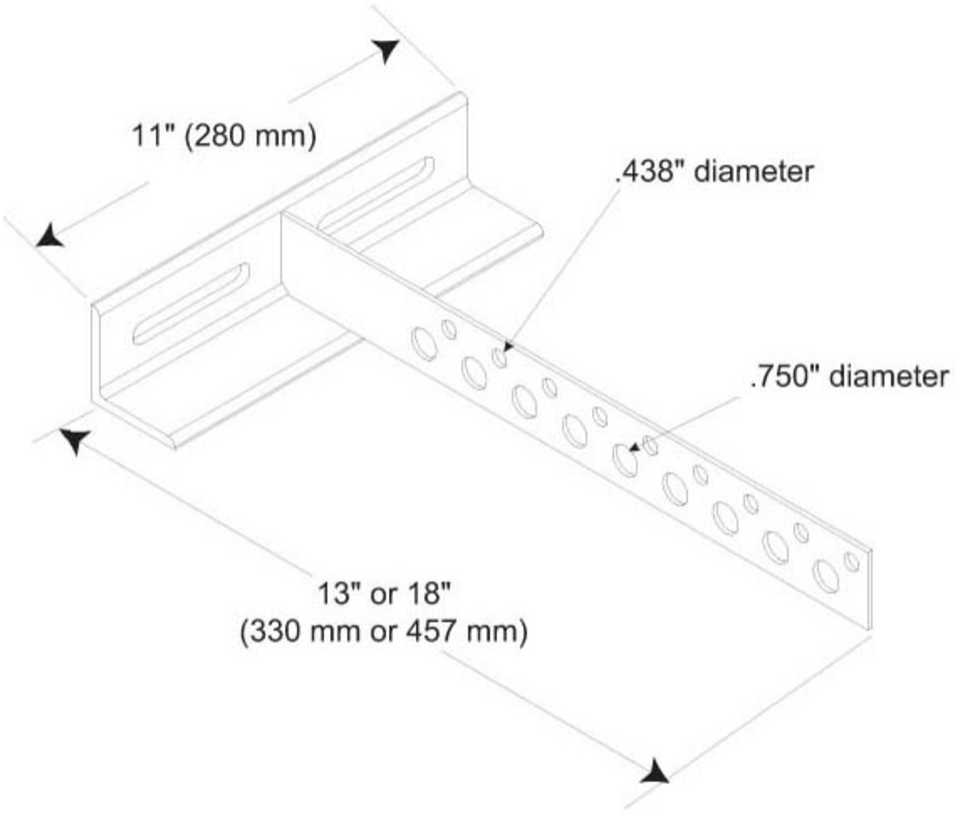

Material Specifications

Material Type	Hot dip galvanized steel

Packaging and Weights

Included	Brackets
Packaging quantity	1
Weight, net	1.9 kg | 4.189 lb

Regulatory Compliance/Certifications

Agency	Classification
CHINA-ROHS	Below maximum concentration value
ISO 9001:2015	Designed, manufactured and/or distributed under this quality management system

©2024 CommScope, Inc. All rights reserved. CommScope and the CommScope logo are registered trademarks of CommScope and/or its affiliates in the U.S. and other countries. For additional trademark information see https://www.commscope.com/trademarks. All product names, trademarks and registered trademarks are property of their respective owners. Revised: September 1, 2023

TL-S06

REACH-SVHC	Compliant as per SVHC revision on www.commscope.com/ProductCompliance
ROHS	Compliant
UK-ROHS	Compliant

©2024 CommScope, Inc. All rights reserved. CommScope and the CommScope logo are registered trademarks of CommScope and/or its affiliates in the U.S. and other countries. For additional trademark information see https://www.commscope.com/trademarks. All product names, trademarks and registered trademarks are property of their respective owners. Revised: September 1, 2023